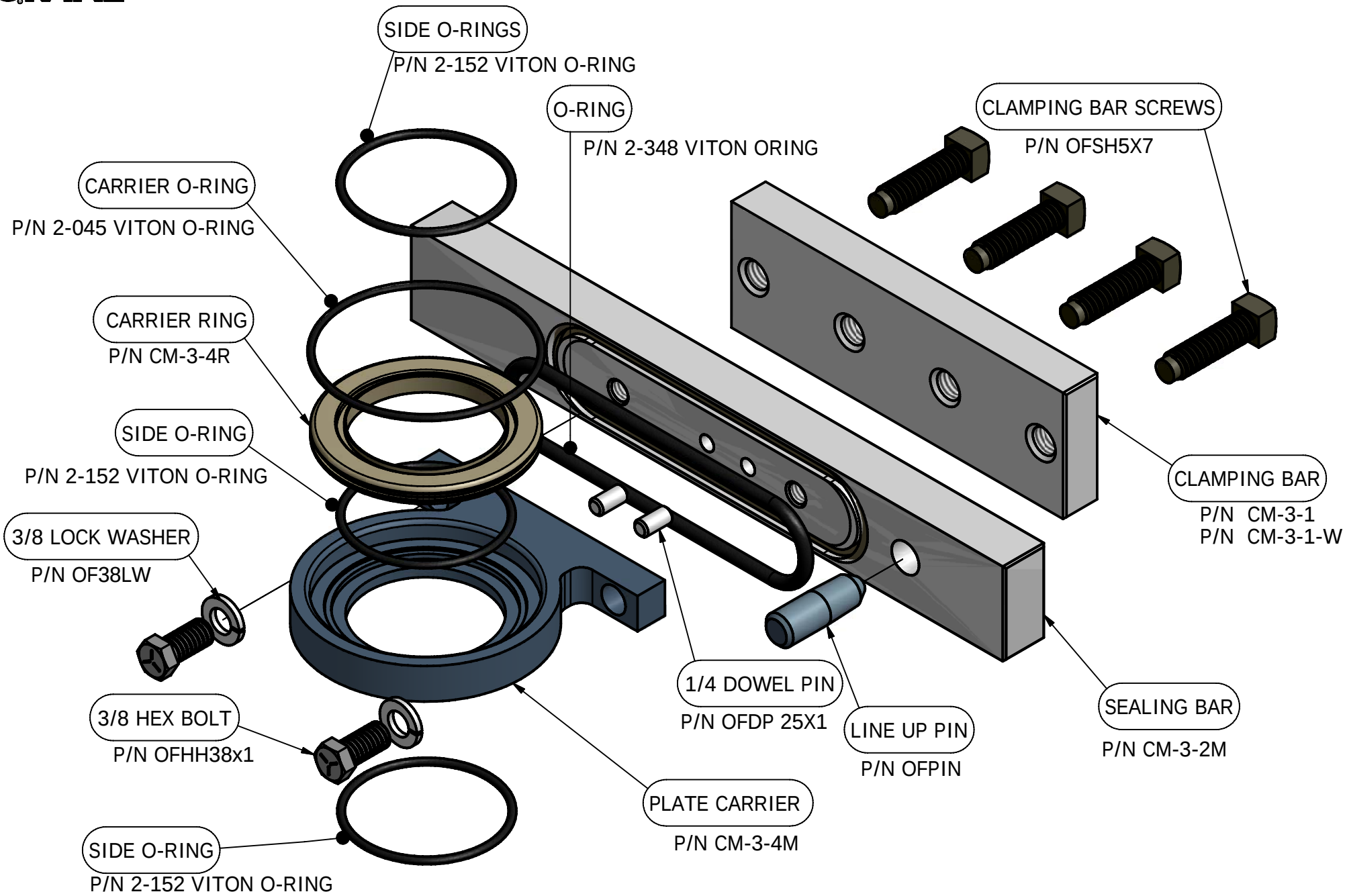

3 INCH PLATE CARRIER ASSEMBLY NEW STYLE AGA-2000